Bareggio, 12/02/2025

SUMMARY

1. MATERIAL & COMPLIANCE SHEET..... Pag. 2

1-A APPLICABLE REGULATIONS ..... Pag. 3

1-B DISCLAIMER..... Pag. 4

1-C LABELLING ..... Pag. 5

2. PACKING SPECIFICATION..... Pag. 6

3. TECHNICAL DRAWING as attached ..... Pag. 7

Date	Rev.	Revision Purpose
11/01/2021	0	Issue of the document
01/02/2021	1	Deleted Doc. NR
26/08/2021	2	Labeling information added
07/09/2021	3	Review of Technical Data Sheet
30/09/2022	4	Certification logos added

Vetronaviglio s.r.l.
Via Don Severino Fracassi, 31/39 – 20008 – Bareggio (MI)
Tel. +39 02 9036 4184 - fax +39 02 9036 4185 - info@vetronaviglio.it
C.F. e P. IVA IT03366120271 – num. R.E.A. MI 1891540 – Codice SDI 4IYRYKK

COMPANY WITH QUALITY SYSTEM CERTIFIED BY DNV ISO 9001

COMPANY APPLYING GOOD MANUFACTURING PRACTICES CERTIFIED BY DNV ISO 22716

1. MATERIAL & COMPLIANCE SHEET

The list of materials used for the manufacturing of the product included in your project is as below:

PRODUCT DESCRIPTION	PRODUCT CODE	MATERIALS	MATERIALS
FLAC. NEW CRISTAL 015 24 V.T. (P)	QC015.0176	- GLASS FORMULATION	Glass chemical composition (Flint Glass) (% w/w) SiO_2 72 - 74 SO_3 0.2 - 0.-4 Na_2O 11 - 14 K_2O 0 - 2 CaO 9 - 13 MgO 0 - 3 Al_2O_3 1 - 3 Fe_2O_3 0.02 – 0.05

Vetronaviglio s.r.l.
Via Don Severino Fracassi, 31/39 – 20008 – Bareggio (MI)
Tel. +39 02 9036 4184 - fax +39 02 9036 4185 - info@vetronaviglio.it
C.F. e P. IVA IT03366120271 – num. R.E.A. MI 1891540 – Codice SDI 4IYRYKK

COMPANY WITH QUALITY SYSTEM CERTIFIED BY DNV ISO 9001
COMPANY APPLYING GOOD MANUFACTURING PRACTICES CERTIFIED BY DNV ISO 22716

1-A APPLICABLE REGULATIONS

Statement of compliance with Regulation (EC) N.1907/2006 (REACH)
With specific reference to Regulation (EC) N.1907/2006 and further amendments (REACH), art. 3(3), cosmetic packagings produced by Vetronaviglio S.r.l. are considered "articles".
Therefore, with specific reference to REACH art. 33, we hereby declare that none of the products listed in the chart above contains any substance included in REACH Annex XIV, as defined by REACH art. 57, or included in the "Candidate list" published by ECHA (Substances of Very High Concern - SVHC), in concentration exceeding 0.1% (weight/weight), as defined by REACH art. 59 (1), and in conformity to REACH art. 59 (10).
Please note that, in accordance to both the Regulation (EC) N.1907/2006 (REACH) and the Regulation (EC) N.1272/2008 (CLP), Vetronaviglio S.r.l. is not a supplier of substances nor preparations, and is therefore not required to send MSDSs to their customers.

Statement of compliance with European Parliament and Council Directive N.94/62/EC
We hereby declare that our products meet the requirements stated by European Directive 94/62/EC "on packaging and packaging waste", including further amendments. In particular, the levels of heavy metals in our products are within the range of 100 ppm (w/w), in compliance to Dir. 94/62/EC art. 11.

Statement of compliance according to CE Cosmetics Regulation N.1223/2009
Vetronaviglio S.r.l. confirms that the above articles and/or components do not contain substances listed in Annex II (banned substances) and Annex III (under restriction substances) of CE Cosmetics Regulation N. 1223/2009. The materials used do not contain significant impurities, and, to our knowledge, our products do not present phenomena of migration of chemicals when they come into contact with their contents. However, we recommend our customers to perform the tests which apply to their formulations.

Statement of compliance to GMPs (Regulation N.2023/2006/EC)
Vetronaviglio S.r.l. confirms that the above articles and/or components are manufactured in compliance with good manufacturing practices (GMP). Such GMPs are those described by the CE Regulation N.2023/2006 for food packaging, which comprises a quality assurance and control system, dedicated process design and equipment, documentation and appropriate qualification of staff. Vetronaviglio S.r.l. applies these GMPs to all stages of manufacturing, processing and distribution of its products.

Statement of compliance to Regulations and Directives on materials and articles intended to come into contact with food (Regulation (EC) N.1935/2004 and Regulation (EC) N.10/2011)
Vetronaviglio S.r.l. confirms that the raw materials used for the production of the above articles and/or components are in compliance with Regulation (EC) N.1935/2004 and Regulation (EC) N.10/2011.

1-B DISCLAIMER

According to the declarations of our suppliers, the raw materials we use are fully compliant with the above Regulations and Directives. We do not introduce any of the substances listed in the Regulations and Directives referenced above in our production processes. Vetronaviglio S.r.l. makes no warranties which extend beyond the information contained herein.

Vetronaviglio S.r.l.

Quality Assurance Manager

Federico Rosi

1-C LABELLING (Applicable for Italy)

The Legislative Decree of 3 September 2020 makes labelling mandatory.
According to the Annexes of Decision 129/97/CE, the information on the label is:

- Alphanumeric Coding
- Family of material
- Collection information

This information changes for plastic, glass, wood, paper, aluminium packaging.

For coding of materials to be reported on packaging, see the guidelines at the following link:
https://www.etichetta-conai.com/documenti/linee-guida/

For this product, the pack coding is as follows:

Pack Coding	Collection type
GL 70	Glass

2. PACKING SPECIFICATION

ITEM DESCRIPTION: *NEW CRISTAL GLASS BOTTLE 15ml – 24/410*

Bottle weight: *68 g*
Total pieces per pallet: *7840*
Total pieces per tray: *140*
Trays per layers: *8*
Total layers per pallet: 7
Total trays per pallet: *56*
Tray net weight: 10 *Kg*
Tray gross weight: 10.5 *Kg*
Pallet type: Fumigated *EPAL (1200*800 mm)*
Pallet height: *110 mm*
Net weight pallet: 560 *Kg (approx.)*
Gross weight pallet: *601 Kg (approx.)*

Pallet composition notes:

- Plastic film on top of the bottles for dust protection
- 2 ply center plate on alternate layer
- Pallet with plastic shrink

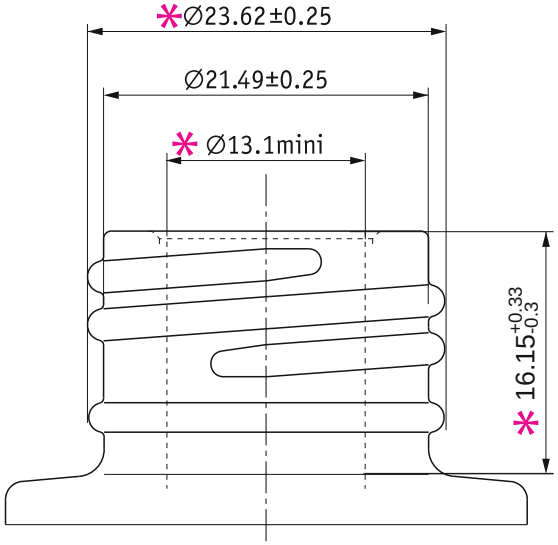

DETTAGLIO A
SCALA 2.000

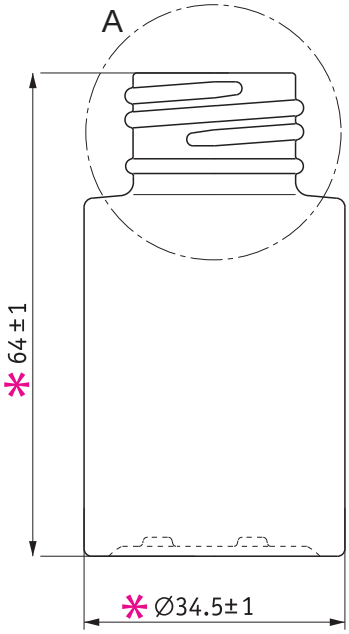

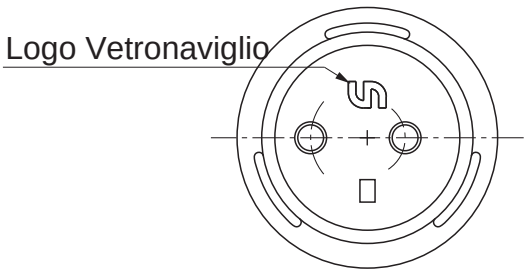

VETRONAVIGLIO
Via Don Severino Fracassi, 31/39 - 20008 Bareggio (MI)
T. +39 02 9036 4184 - F. +39 02 9036 4185
www.vetronaviglio.it - info@vetronaviglio.it

REV-01 (27/12/2011)

NEW CRISTAL 15 ml

general toll. : ± 0.25
neck: GCMI 24/410
Ø opening: 14.1 ± 0.3
Ø minimum interior: 13.11

weight: 68 gr ± 1 gr
capacity: 22 ml ± 1.5 ml
material: glass

CONFIDENTIAL
Questo disegno è di proprietà di Vetronaviglio srl.
Ogni diffusione non autorizzata è severamente proibita.
This drawing is property of Vetronaviglio srl.
Unauthorized disclosure is strictly prohibited.